FORK MOUNTED INVERTED RUG RAM - CRP-48

APPROX WEIGHT: 356.03 lbs.
DOES NOT INCLUDE WEIGHT OF POWER OR PACKAGING!!!

*** ANY ADDITIONS, DELETIONS, OR OMISSIONS MUST BE CORRECTED ON THIS DRAWING AS THIS DRAWING WILL BE CONSIDERED ALL INCLUSIVE ***
ALL GRAPHICS PROVIDED ARE FOR REFERENCE ONLY. IF CERTAIN DIMENSIONS ARE CRITICAL PLEASE VERIFY THOSE DIMENSIONS WITH YOUR SALESPERSON

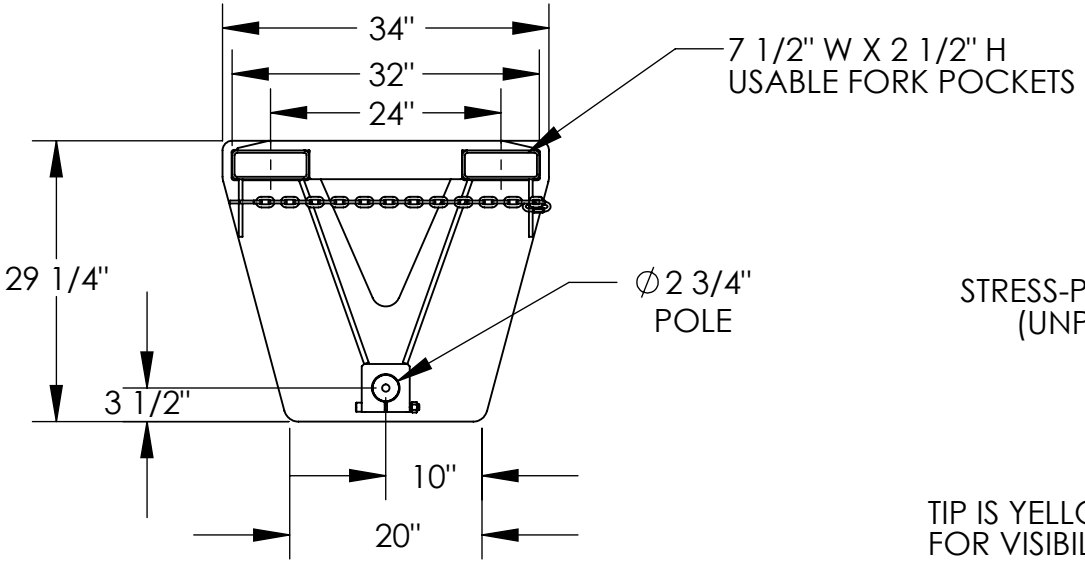

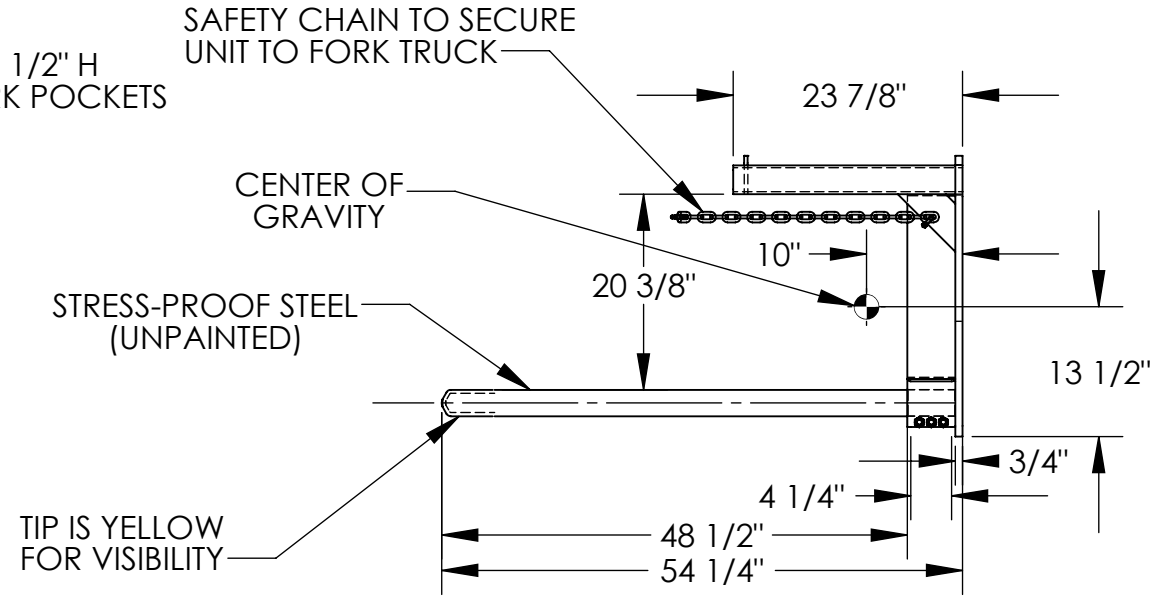

POLE DIMENSION TOLERANCE ± 1/2"

HORIZONTAL CENTER OF GRAVITY: 10"
VERTICAL CENTER OF GRAVITY: 13 1/2"
LOST LOAD: 356 LBS. (APPROX.)
MINIMUM EFFECTIVE THICKNESS= LESS THAN 1"

NOTE: NEVER EXCEED LOAD CENTER RATING PER FORK TRUCK MANUFACTURER'S GUIDELINES. DO NOT USE THIS FORK TRUCK ATTACHMENT IF LOAD WILL EXCEED FORK TRUCK MANUFACTURER'S LOAD CENTER RATING.

DIMENSION TOLERANCE ± 1/4"

STANDARD FEATURES

MODEL NUMBER: CRP-48
CAPACITY: 2,500 LBS. UNIFORM CAPACITY
POLE LENGTH: 48 1/2"
POLE DIAMETER: 2 3/4"
OVERALL LENGTH: 54 1/4"
OVERALL HEIGHT: 29 1/4"
OVERALL WIDTH: 34"
FORK POCKETS ARE 7 1/2" W x 2 1/2" H
USABLE ON 24" FORK CENTERS
WITH SAFETY CHAIN TO SECURE TO THE
UNIT TO THE MAST OF THE FORK TRUCK
DURABLE LIQUID PAINT BLUE FINISH

SPECIAL FEATURES

NONE

APPROVAL

I, THE UNDERSIGNED, AGREE THAT THE PRODUCT AS REPRESENTED SATISFIES DESIGN AND DIMENSION REQUIREMENTS. I ALSO ACKNOWLEDGE MY DUTY TO CONFIRM PRODUCT AND INSTALLATION COMPLIANCE WITH ALL APPLICABLE FEDERAL, STATE AND LOCAL REGULATIONS AND STANDARDS.

UNITS REQUIRING APPROVAL DRAWINGS OR MODIFIED ARE NON-RETURNABLE

[ ] As drawn [ ] As marked

Signed:_____ Date:_____

Printed Name:_____

LEAD TIME WILL START UPON RECEIPT OF SIGNED APPROVAL DRAWING

DISTRIBUTOR'S NAME: HOF Equipment Company		P.O.# X
		W.O.# X
DRAWN BY: PAK	DATE: 10/13/2023	SALES: X
REFERENCE: X	SCALE: 1:20	FILE NAME: 08-007-498
QUOTED LEAD TIME: X	QUOTE # X	